Soltice® Metal Occasional Tables

Soltice Metal occasional tables offer modern appeal with a minimalistic approach. The simple design allows for true versatility in specification and application.

Key Features

A High-Traffic Elegance

Clean, refined metal frame design delivers exceptional durability without sacrificing aesthetics—purposefully designed to complement Soltice Metal seating and coordinate seamlessly with lounge and waiting environments. Backed by KI's lifetime structural warranty and a 300 lb weight rating for confidence in high use environments.

B Top Shapes

Club and lamp tables are available with round and square tops. Coffee are available with rectangular and round tops. Console tables are rectangular.

C Table Heights

Choose from H16" and H22" club and lamp tables, H16" coffee tables, and H30" console tables.

D Top Material Options

Available in a curated selection of performance and aesthetic materials, including laminate, veneer, and solid surface (Corian™ glacier white).

Styles

Square Club
W20" **D**20" **H**16, 22"

Round Club
Dia. 20" **H**16, 22"

Square Lamp
W42" **D**24" **H**16, 22"

Round Lamp
Dia. 24" **H**16, 22"

Rectangular Coffee
W42" **D**24" **H**16"

Round Coffee
Dia.36" **H**16"

Console
W47" **D**15" **H**30"

Options

Table Top

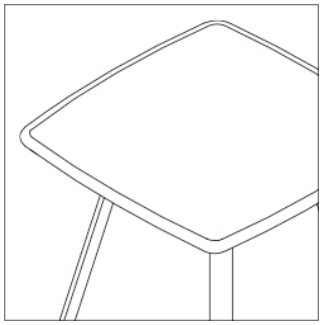

Laminate

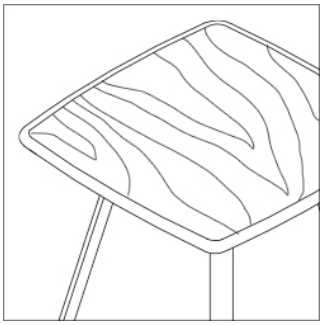

Veneer

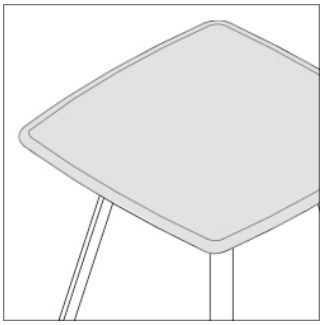

Solid Surface
*Not Available on Console Table

Edge

*Only Available on Laminate Styles

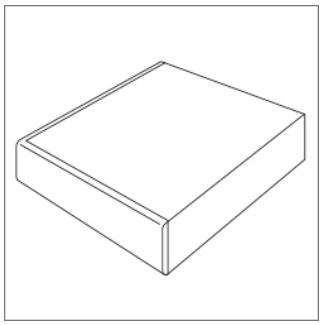

74P

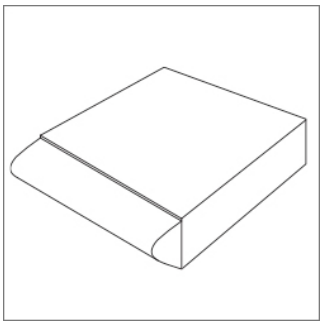

WD

Document Links

Brochure →

Pricing →

Video →

Photography →

CAD/Revit Symbols →

Documents →

Material Approvals →

Soltice Metal Collection

Guest Chair

Bariatric Chair

Multiple Seating

Lounge Seating

Occasional Table

WARRANTY

Lifetime

View Terms & Conditions

WEIGHT RATING

300 lbs.