Soltice® Metal Bariatric Chair

The Soltice Metal bariatric seating offers a modern, streamlined design with a durable metal frame, providing an inclusive and dignified seating solution for any environment.

Key Features

A High-Traffic Elegance

Clean, refined metal frame design delivers exceptional durability without sacrificing aesthetics. Backed by KI's lifetime structural warranty and a 600 lb weight rating for confidence in high use environments.

B Dignified Comfort

Designed with an extended seat width for dignified comfort without visually separating bariatric users from the rest of the space.

C Safe Transitions

Designed to support ease of ingress and egress with a 19″ seat height. Arm caps feature an intentional overhang that is easy to grip and structurally designed to support push off force when standing.

D Arm Options

Choose from open arms or closed arms with poly, wood, or solid surface arm caps.

E Material Options

Choose from Pallas Textiles, KI ingrade, COM, or KOM upholstery options. Specify as matching or contrasting fabric. Optional moisture barrier enhances performance in healthcare environments.

F Clean Out Design

Integrated clean out space supports efficient housekeeping while the elevated base options allow for easy cleaning under unit.

G Field Replaceable Components

Key components are field replaceable (see part diagrams), reducing downtime and supporting long term value.

Styles

Open Arm

W33" **D**23.5" **H**33.81"
Seat: **W**30" **D**17.5" **H**19"
Arm Height: 27.5"

Closed Arm

W33" **D**23.5" **H**33.81"
Seat: **W**30" **D**17.5" **H**19"
Arm Height: 27.5"

Options

Arm Caps

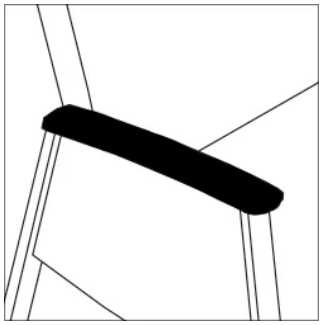

Poly

*Available in Black, Grey, and White

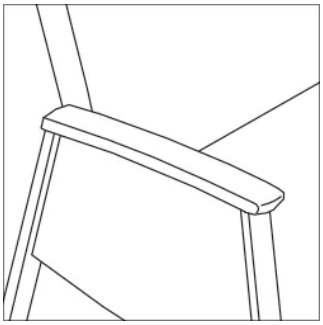

Solid Surface

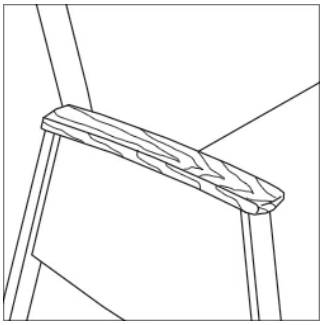

Wood

Upholstery

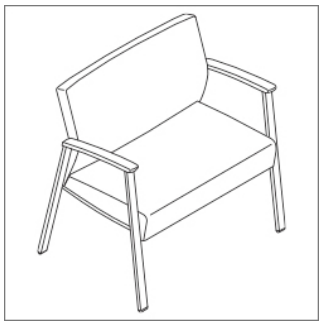

Non-Contrast

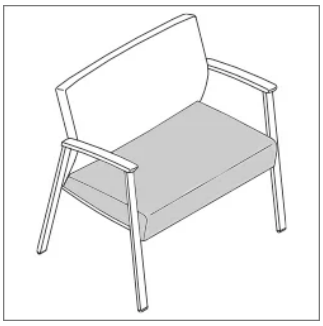

Contrast

Document Links

Brochure →

Pricing →

Video →

Photography →

CAD/Revit Symbols →

Documents →

Material Approvals →

Soltice Metal Collection

Guest Chair

Bariatric Chair

Multiple Seating

Lounge Seating

Occasional Table

WARRANTY

Lifetime

View Terms & Conditions

WEIGHT RATING

600 lbs.